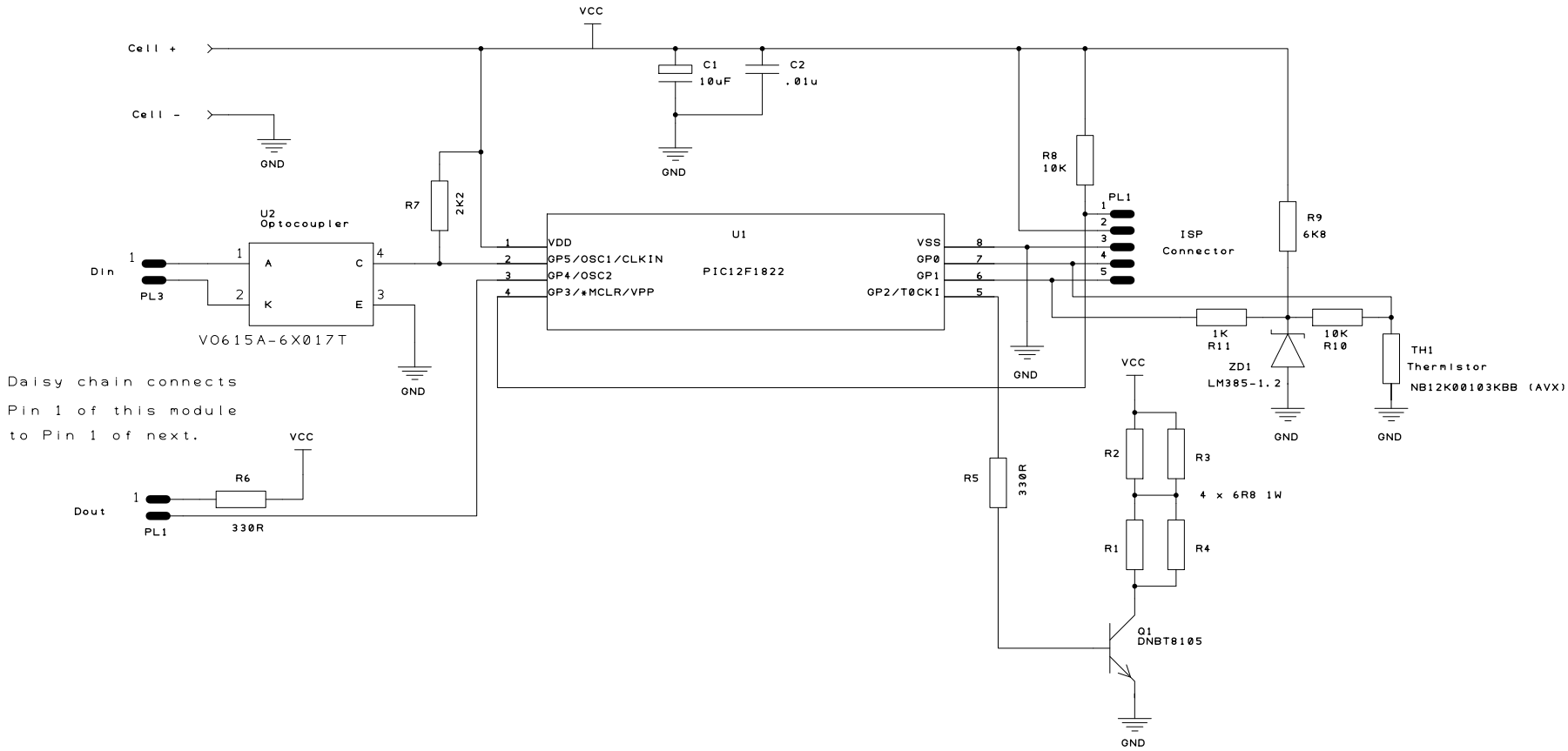

E	D	C	B	A	Drawn	Check	Projection Do Not Scale		
Drn	Drn	Drn	Drn	Project CellTopBMS			Client		
Chk	Chk	Chk	Chk	Title Cell Module			Filename	Drawing No.	Sheet of